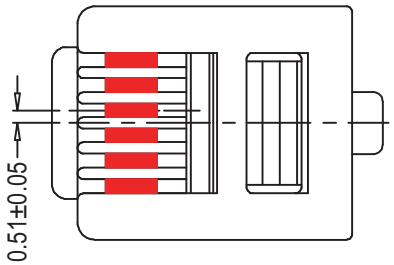

MP6P6C F

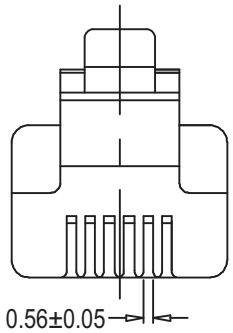

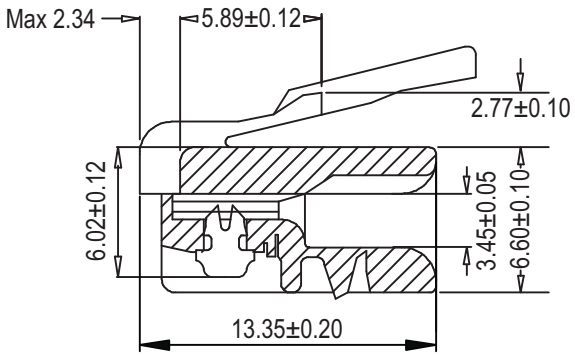

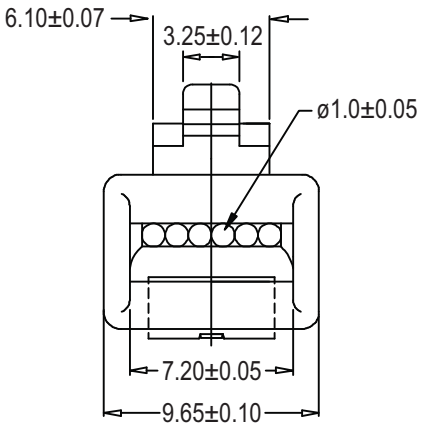

Material:

- Housing: Polycarbonate UL94V2
- Contact Blade: High Strength Copper Alloy
- 100 Micron Nickel underplated
- Plating type: 8% Phosphor Bronze
- Plating Thickness: 6μ" Gold plated
- Operating Temperature: -40°C ~ 125°C

Electrical:

- Current Rating: 250V AC / Max @2.0A
- Dielectric: 500V AC
- Insulation Resistance: 500MΩ

Complies with FCC68/F

Unit: MM

RoHS Complaint

Scale	1:1							Name
TOLERANCE						Drawn	12.19.11	Chappell
X.X	±0.40					Approved		
X.XX	±0.25							
X.XXX	±0.15							
Angle	±3°							
			Modification	Date	Name			

ASSMANN WSW components

Item No.
A-MO-6/6-SF-R

Title
Modular Cable Plug - 6P6C, Flat cable, Unshielded

Drawing No.

rev00

Replace

Sheet