api technologies corp.
Spectrum Control

Surface Mount Low Pass Filters

MSM Series

MSM

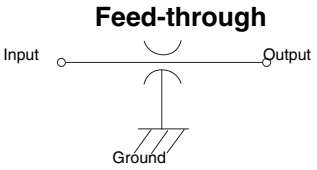

Working Voltage ..... 50 VDC
Test Voltage ..... 150 VDC
Current Rating ..... 10 Amps max.
Insulation Resistance ..... 1.0 MΩ
Terminations ..... Ni-Barrier
Soldering Conditions ..... Max. 250˚C-5 sec.

Insertion Loss

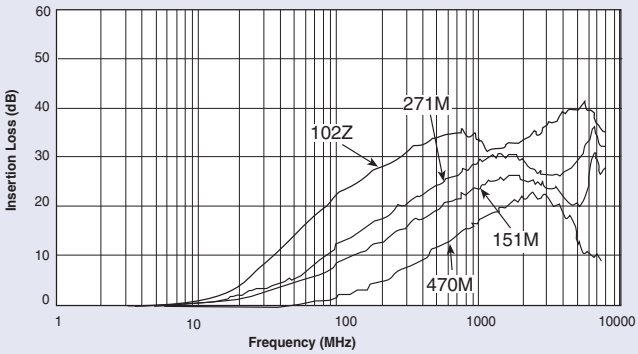

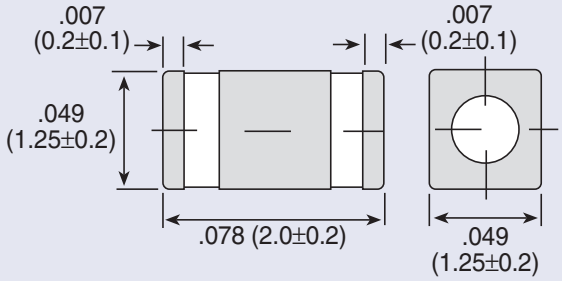

MSM

Dimensions in inches (mm)

MSM Ordering Information

MSM	4	T	470M	10	T
Style	**Circuit Configuration**	**Temperature Characteristic**	**Capacitance**	**Current Rating**	**Packaging**
MSM (Miniature)	**4 -** Feed-Through	**R -** +/-15% **T -** +22/-33% **V -** +22/-82%		10 Amps	**T -** Tape and Reel 2,000 pcs/reel **B -** Bulk pack 1,000pcs/reel

Value	Tolerance
47 pF	+50/- 20%

Specifications

Part Number	Temperature Characteristics	Capacitance	Capacitance Tolerance	Current Rating	Rated Rating Rating	Temperature Range
MSM4T470M10	T	47pF	+50/-20%	10A	50VDC	-55/+125˚C
MSM4R151M10	R	150pF				-55/+125˚C
MSM4R271M10	R	270pF				-55/+125˚C
MSM4V102M10	V	1000pF				-25/+85˚C

MSM Recommended Board Pattern

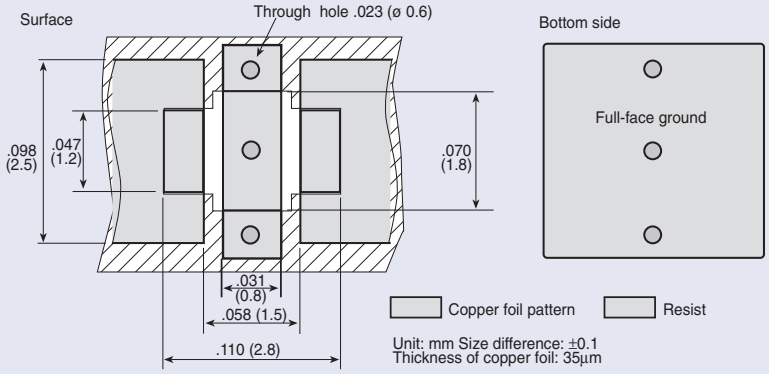

Note: Exclusively for reflow soldering

MSM Tape and Reel Packaging

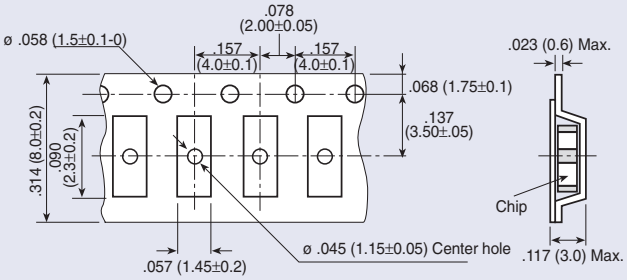

Dimensions in inches (mm)