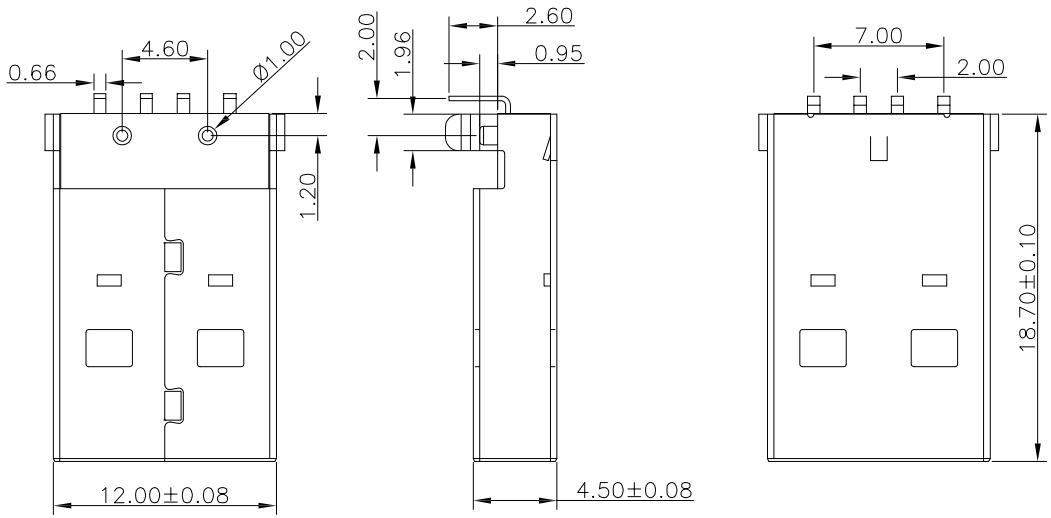

NOTES:
1.MATERIAL:
1.1 HOUSING: PBT+30%G.F UL94V-0,BLACK COLOR.
1.2 CONTACT: BRASS.
1.3 SHELL: STELL.
2.FINISH:
2.1 CONTACT:
CONTACT AREA: SELECTIVE 30u" gold
SOLDER AREA: TIN PLATED
UNDER PLATE: NI PLATED
2.2 SHELL: NI PLATED
3. MECHANICAL:
3.1 MATING FORCE: 3.57kgf MAX.
3.2 UNMATING FORCE: 1.02kgf MIN
3.3 DURABILITY: 1500 CYCLES MIN
4. ELECTRICAL:
4.1 CURRENT RATING:1.5A.
4.2 DIELECTRIC STRENGTH: 500V AC FOR 1MINUTE.
4.3 CONTACT RESISTANCE: 30mΩ MAX.
4.4 INSULATION RESISTANCE: 1000MΩ MIN
5. OPERATING TEMPERATURE: -55°C TO +85°C.

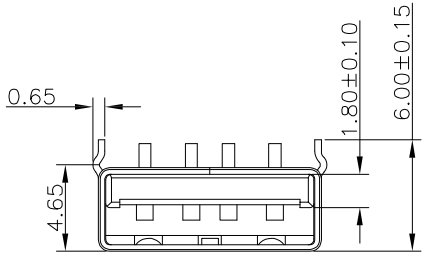

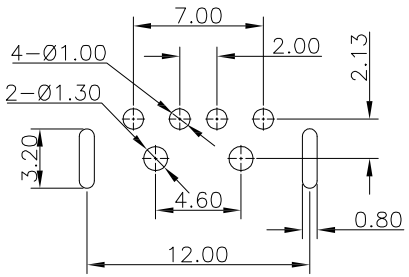

RECOMMENDED P.C.B LAYOUT
(TOLERANCE:±0.05)

RoHS compliant

Scale	Free						Date	Name
TOLERANCE						Drawn	10.06.2014	Ray
.X	±0.30					Approved	10.06.2014	Ray
.XX	±0.20							
.XXX	±0.10							
DIM	TOL							
X.°	±5°							
Angle	TOL	0	Drawn	10.06.2014	Ray			
UNIT	mm	Id.	Modification	Date	Name			

Customer-No.

ASSMANN WSW-No.
A-USB/2-A-LP

Drawing-No.
ASS 6380 CO

rev00

Replace

SHEET

ASSMANN WSW components