Tous droits strictement reserves. Reproduction ou communication a des tiers interdite sous quelque forme que ce soit sans autorisation ecrite du propietaire. Propriete de c FCI. Droits de reproduction FCI.

All rights strictly reserved. Reproduction or issue to third parties in any form whatever is not permitted without written authority from the proprietor. Property of FCI. Copyright FCI.

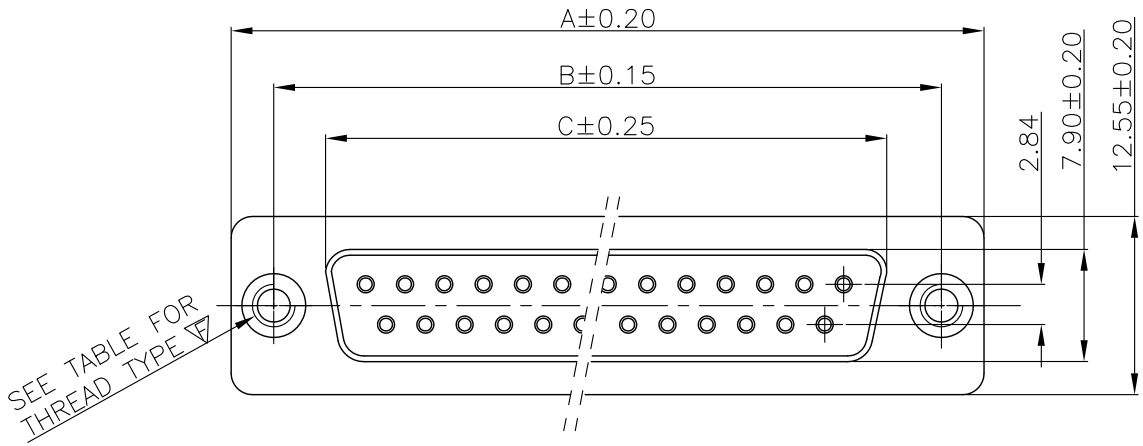

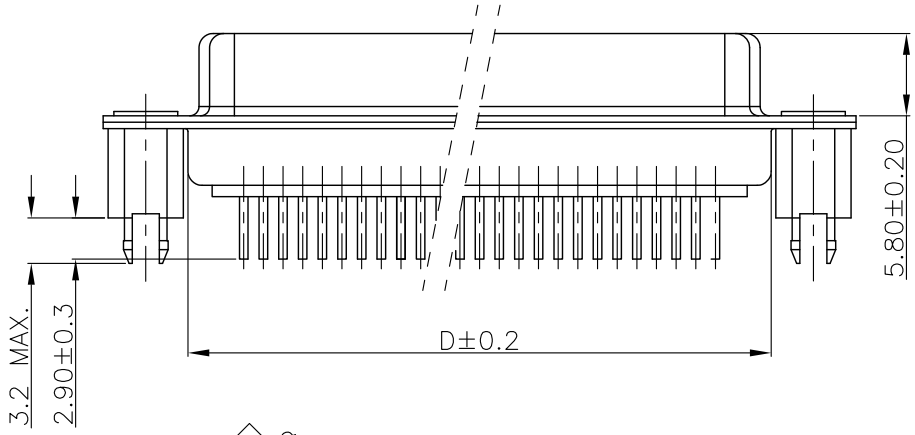

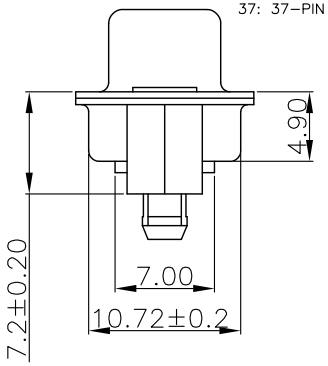

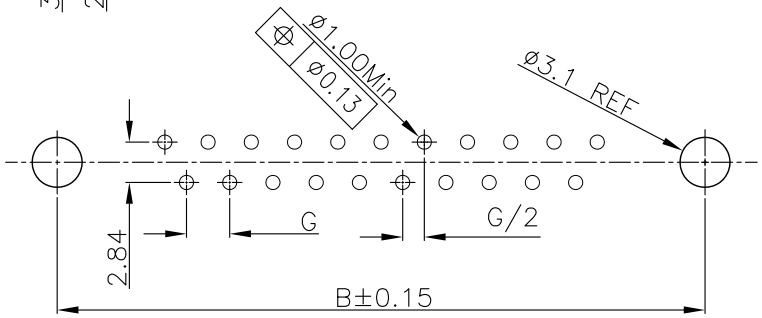

P.C.B LAYOUT
t: 1.6±0.1MM

REMARK:

1. CHARACTERISTICS:
   - RATED VOLTAGE: 250V
   - RATED CURRENT: 5AMP
   - CONTACT RESISTANCE: 25mohms MAX. INITIAL; 40mohms MAX. AFTER.
   - INSULATION RESISTANCE: 5000Mohms MIN. at 500V DC
   - DIELECTRIC STRENGTH: 1000VRMS
   - OPERATING TEMPERATURE RANGE: -55℃～105℃
   - INSERTION/EXTRACTION FORCE PER CONTACT: 5N Max. /0.3N Min.
   - MATING/UNMATING CYCLES: 50MATINGS MIN.

2. MATERIAL:
   - INSULATORS: GLASS-FILLED THERMOPLASTIC UL94V-0, COLOR IN BLACK.
   - CONTACTS: COPPER ALLOY, SELECTIVE GOLD ON CONTACT AREA,
     100u" Min MATTE TIN TOP OVER SOLDER AREA,
     30u" Min NICKEL UNDER PLATE.
   - SHELL: STEEL, 100u" Min NICKEL TOP OVER,
     50u" Min COPPER UNDER PLATE.
   - CLINCH NUT: COPPER ALLOY, 100u" Min MATTE TIN PLATED.

3. PART NUMBER DESCRIPTION: **10090098-S XX X X LF**

- SERIES NO.
- TYPE
  - S: SOCKET (FEMALE)
- NUMBER OF CONTACTS
  - 09: 9-PIN
  - 15: 15-PIN
  - 25: 25-PIN
  - 37: 37-PIN
- FLANGE MOUNTING OPTION
  - X: UNC #4-40 CLINCHNUTS
  - L: M3 CLINCHNUTS
- CONTACT FINISH
  - 4: GOLD FLASH
  - 6: 30u" PLATING OPTION AVAILABLE ON REQUEST
- LF: ROHS COMPLIANT

POS.	PART NO.	THREAD TYPE
9	10090098-S09*LLF	M3X0.5
15	10090098-S15*LLF	M3X0.5
25	10090098-S25*LLF	M3X0.5
37	10090098-S37*LLF	M3X0.5
9	10090098-S09*XLF	UNC 4-40
15	10090098-S15*XLF	UNC 4-40
25	10090098-S25*XLF	UNC 4-40
37	10090098-S37*XLF	UNC 4-40

POS.	A	B	C	D	G
09	30.81	24.99	16.33	19.28	2.74
15	39.24	33.32	24.66	27.75	2.74
25	53.04	47.04	38.38	41.30	2.77
37	69.32	63.50	54.84	57.40	2.77

mat'l. code				tolerances unless otherwise specified		
ltr	ecn no	dr	date			.X ± 0.38
A	T09-1033	J.H	3/13/09	linear		.XX ± 0.25
B	T09-1044	J.H	4/2/09			.XXX ± 0.10
				angles		0° ±2°
				dr	JASON HSU	3/12/09
				engr	JASON HSU	3/12/09
				chr	GARY HSIEH	3/12/09
				appd	JOSEPH HSIA	3/12/09
sheet index	revision sheet	B 1	B 2			

CUSTOMER COPY

projection

MM

scale 1:1

FCI www.fciconnect.com

title: D-SUB FEMALE STRAIGHT

product family: D-SUB

size: A4

dwg no: 10090098

code: TWN

sheet 1 of 2

cage code 22526

ACAD

Tous droits strictement reserves. Reproduction ou communication a des tiers interdite sous quelque forme que ce soit sans autorisation ecrite du propietaire. Propriete de c FCI. Droits de reproduction FCI.

All rights strictly reserved. Reproduction or issue to third parties in any form whatever is not permitted without written authority from the proprietor. Property of FCI. Copyright FCI.

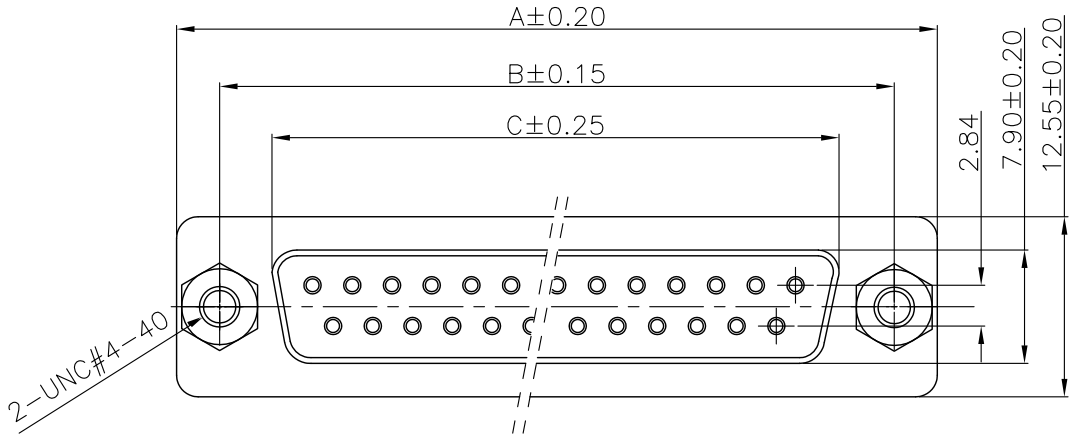

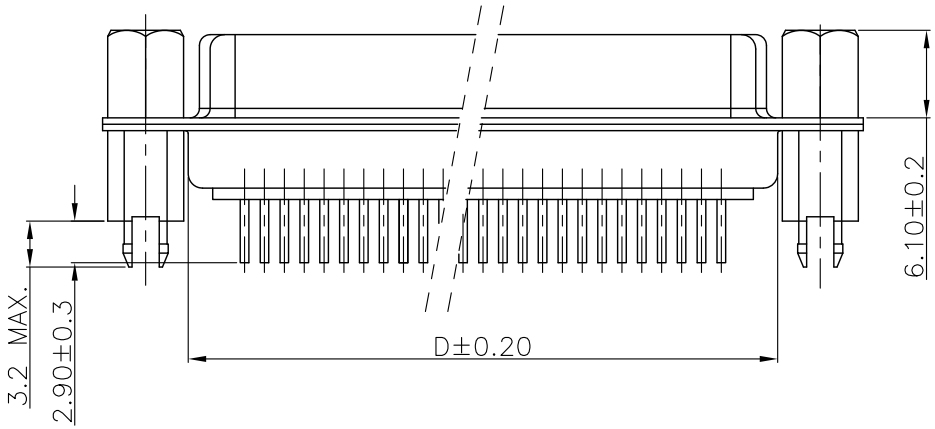

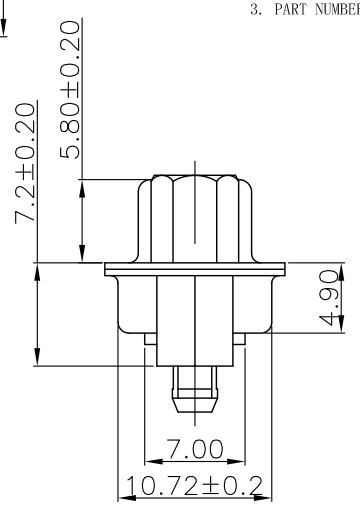

REMARK:

1. CHARACTERISTICS:
   - RATED VOLTAGE: 250V
   - RATED CURRENT: 5AMP
   - CONTACT RESISTANCE: 25mohms MAX. INITIAL; 40mohms MAX. AFTER.
   - INSULATION RESISTANCE: 5000Mohms MIN. at 500V DC
   - DIELECTRIC STRENGTH: 1000VRMS
   - OPERATING TEMPERATURE RANGE: -55℃～105℃
   - INSERTION/EXTRACTION FORCE PER CONTACT: 5N Max./0.3N Min.
   - MATING/UNMATING CYCLES: 50MATINGS MIN.

2. MATERIAL:
   - INSULATORS: GLASS-FILLED THERMOPLASTIC UL94V-0, COLOR IN BLACK.
   - CONTACTS: COPPER ALLOY, SELECTIVE GOLD ON CONTACT AREA,
     100u" Min MATTE TIN TOP OVER SOLDER AREA,
     30u" Min NICKEL UNDER PLATE.
   - SHELL: STEEL, 100u" Min NICKEL TOP OVER,
     50u" Min COPPER UNDER PLATE.
   - CLINCH NUT: COPPER ALLOY, 100u" Min MATTE TIN PLATED.
   - SCREW LOCK: COPPER ALLOY, 100u" Min BRIGHT NICKEL PLATED.

3. PART NUMBER DESCRIPTION: 10090098-S XX X X LF

- SERIES NO. — 10090098
- TYPE — S: SOCKET (FEMALE)
- NUMBER OF CONTACTS — 09: 9-PIN; 15: 15-PIN; 25: 25-PIN; 37: 37-PIN
- CONTACT FINISH — 4: FLASH GOLD; 6: 30u" PLATING OPTION AVAILABLE ON REQUEST
- FLANGE MOUNTING OPTION — V: UNC #4-40 SCREWLOCKS
- LF: ROHS COMPLIANT

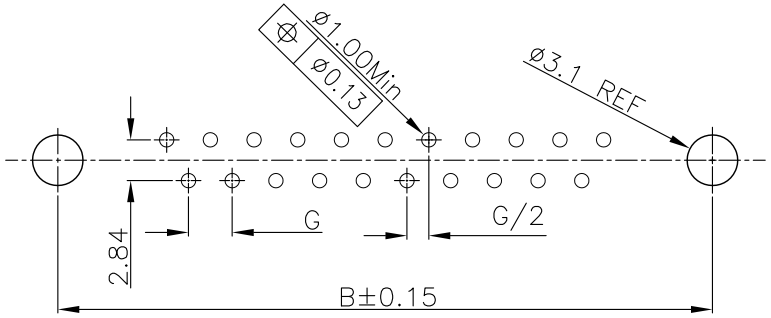

P.C.B LAYOUT
t: 1.6±0.1MM

POS.	PART NO.	A	B	C	D	G
09	10090098-S09*VLF	30.81	24.99	16.33	19.28	2.74
15	10090098-S15*VLF	39.24	33.32	24.66	27.75	2.74
25	10090098-S25*VLF	53.04	47.04	38.38	41.30	2.77
37	10090098-S37*VLF	69.32	63.50	54.84	57.40	2.77

mat'l. code			
ltr	ecn no	dr	date
B			
sheet index	revision sheet		

tolerances unless otherwise specified		
linear	.X ± 0.38	
	.XX ± 0.25	
	.XXX ± 0.10	
angles	0° ±2°	
dr	JASON HSU	3/12/09
engr	JASON HSU	3/12/09
chr	GARY HSIEH	3/12/09
appd	JOSEPH HSIA	3/12/09

CUSTOMER COPY

projection

MM

scale 1:1

FCI www.fciconnect.com

title: D-SUB FEMALE STRAIGHT

product family: D-SUB

size: A4 | dwg no: 10090098 | code: TWN | sheet: 2 of 2

cage code: 22526

ACAD

STATUS Released

PDM: Rev:B

Printed: Apr 09, 2009