Low Noise Amplifier

P/N: JXWBLA-T-1000-18000-38

Frequency Range(GHz)	1-18
Gain(dB)	38
Flatness(dB)	2
Pout@1dB(dBm)	10
Noise Figure(dB)	4
Input VSWR	2.2 max
Output VSWR	2.2 max
Connector	SMA-Female
Operating Temperature(ºC)	-45 ~ +70
Storage Temperature(ºC)	-55 ~ +80
Size(mm)	40.7 x 16.8 x 8.1

Outline Drawing

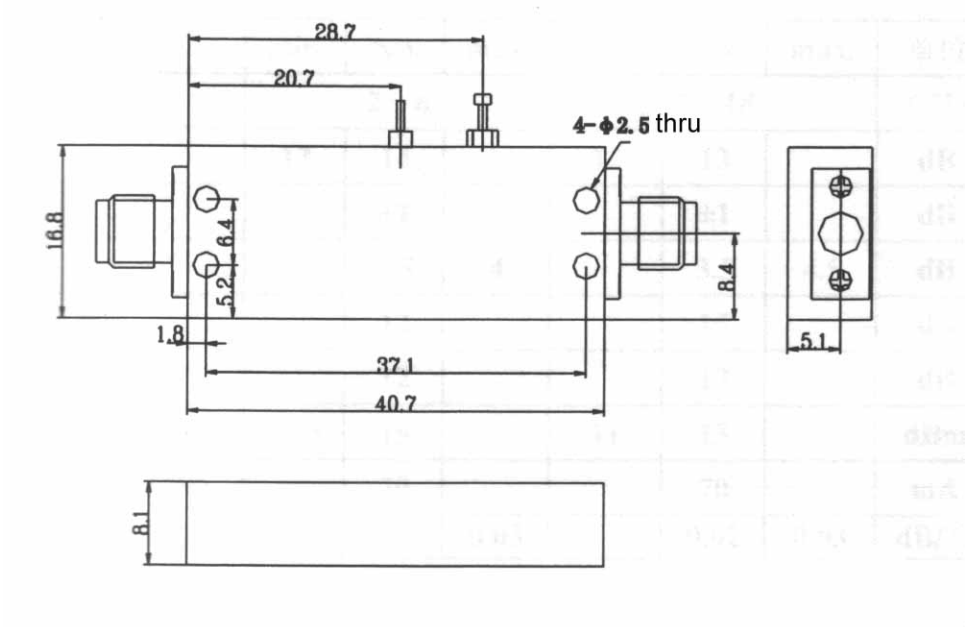

For current data sheets, please contact: sales@aacix.com