ETRI® Series 171D — 62x62x15 mm [2.44 x 0.59"]

DC Axial Fans

171D series are not available anymore.
Please consult factory:
Tel.: +33 (0)2 54 23 14 54
Sales department: info@etrinet.com

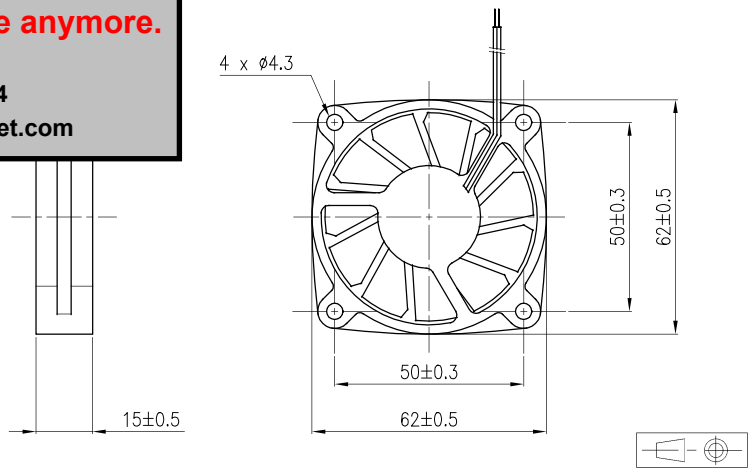

Approvals

Life expectancy

L-10 LIFE AT 40°C:
50 000 hours

Brushless DC Motor

Electrical protection: integrated circuit
Housing material: plastic UL 94 VO
Impeller material: plastic UL 94 VO
Weight: 42 g

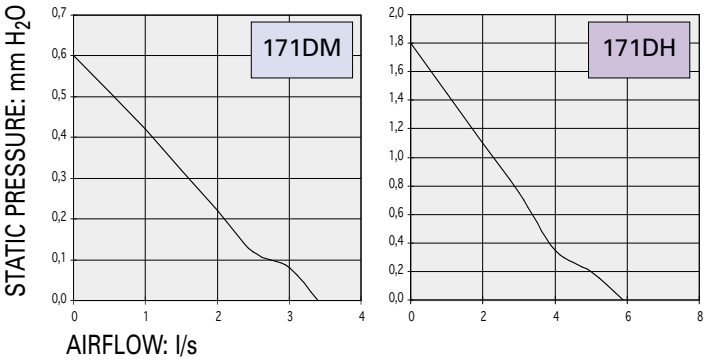

Part number	Nominal voltage	Airflow	Noise level	Nominal speed	Input power	Voltage range	Bearing system		Connection type		Operating temperature	
	V	l/s	dB(A)	RPM	W	V	Ball	Sleeve	Leads	Terminals	Min. °C	Max. °C
171DM5LP31000	5	3,4	28	2300	0,8	(4,5-5,5)		X	X		- 5	60
171DH1LP31000	12	5,9	30	3800	2,4	(10,2-13,8)		X	X		- 10	60
171DH2LP31000	24	5,9	30	3800	2,4	(20,4-27,6)		X	X		- 10	60

Accessories:
- Plastic finger guard P/N : PFG-60
- Plastic filter P/N : F60/T102
- Metal finger guard P/N : 60-43
- Metal mesh filter P/N : 60-G
- Rubber mounts P/N : AM-10

Non contractual document. Specifications are subject to change without prior notice. Pictures for information only. Edition N°2/01-Rev.1