ZMD	**Package PQFP128** (28x28)	**MDS** **719**

Supersedes
Edition 11.95

Dimensions in millimetres

Based on JEDEC JEP95: MO-112DB-1

1 Dimension

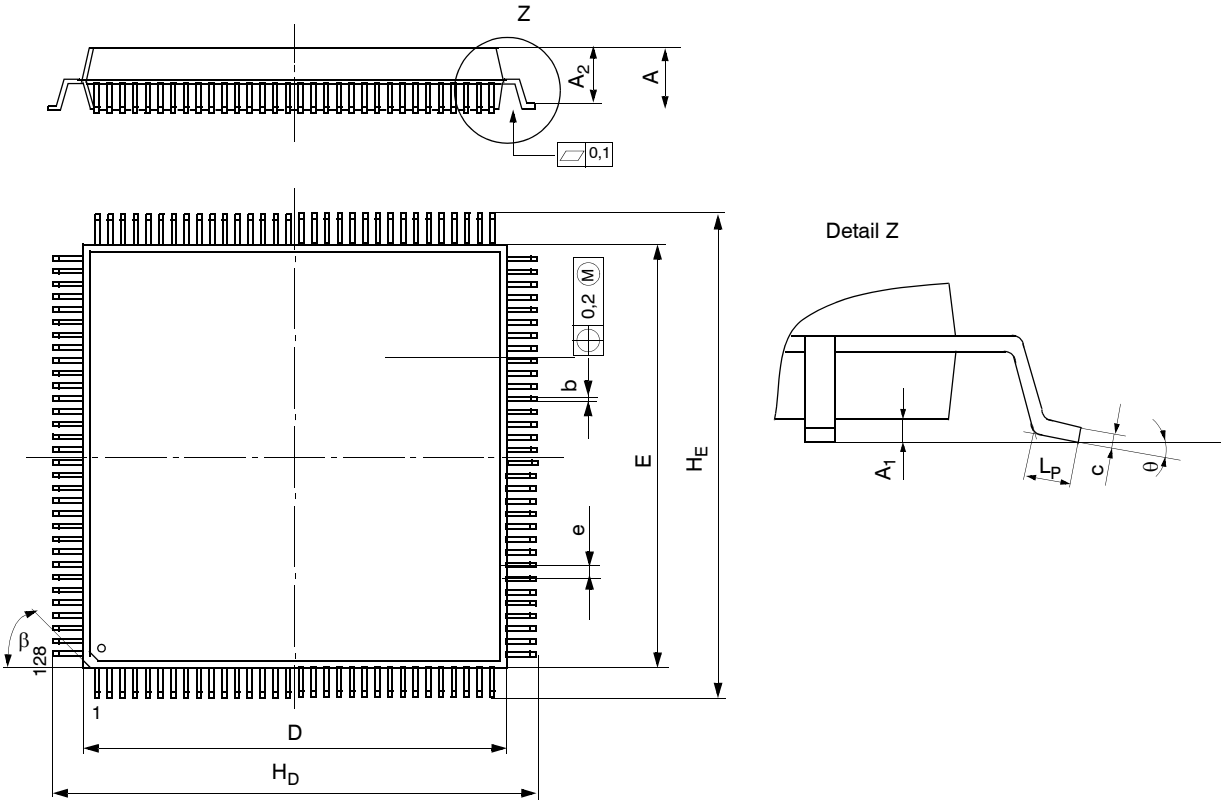

Dimensions of Sub-Group B1	
e_{nom}	0,80
A_{max}	4,07
b_{Pmin}	0,30
b_{Pmax}	0,45
H_{Emin}	31,65
H_{Emax}	32,15
H_{Dmin}	31,65
H_{Dmax}	32,15
L_{Pmin}	0,65

Dimensions of Sub-Group C1	
A_{min}	3,37
A_{1min}	0,25
A_{1max}	0,50
A_{2min}	3,17
A_{2max}	3,67
c_{min}	0,12
c_{max}	0,23
D_{min}	27,90
D_{max}	28,10
E_{min}	27,90
E_{max}	28,10
θ_{min}	0°
θ_{max}	10°
β	45°

2 Weight	≤ 5,4 g
3 Package Body Material	Low Stress Epoxy
4 Lead Material	FeNi-Alloy or Cu-Alloy
5 Lead Finish	solder plating
6 Lead Form	Z-bends

Zentrum Mikroelektronik Dresden AG		
Editor:	Date:	Doc-No. QS-000719-HD-03
Check:	Quality:	

Als Betriebsgeheimnis anvertraut. Alle Rechte vorbehalten. Proprietary data, company confidential. All rights reserved.